常规系列
(General purpose)
DJW12-33(12V33Ah)

LEOCH 理士电池® LEOCH BATTERY

规格 Specifications

额定电压 Rated Voltage		12V
标称容量 Nominal Capacity(C_{20},1.80V/cell)		33Ah
尺寸 Dimension	长 Length	195±2mm (7.68 in.)
	宽 Width	130±2mm (5.12 in.)
	高 Container Height	164±2mm (6.46 in.)
	总高(含端子) Total Height	167±2mm (6.57 in.)
重量 Approx Weight		10.5 Kg (23.1 lbs)
端子 Terminal		M6
外壳材料 Container Material		ABS
额定容量 Rated Capacity (25°C)	33.00 Ah	C20(1.65A,1.80V/cell)
	30.70 Ah	C10(3.07A,1.80V/cell)
	28.40 Ah	C5(5.68A,1.75V/cell)
	26.04 Ah	C3(8.68A,1.75V/cell)
	21.20 Ah	C1(21.2A,1.67V/cell)
5S最大放电电流 Max. Discharge Current		495A (5s)
内阻 Internal Resistance (25℃)		Approx 13.0mΩ
运行温度 Operating Temp.Range	放电 Discharge	-20 ~ 55°C (-4 ~ 131°F)
	充电 Charge	0 ~ 40°C (32 ~ 104°F)
	存储 Storage	-15 ~ 50°C (5 ~ 122°F)
推荐温度 Nominal Operating Temp. Range		25±5°C (77±5°F)
最大充电电流(25°C)Max.Charging Current		9.9A
充电电压(25°C) Charge voltage	浮充 Float	13.5V
	温度补偿 Temp. Coefficient	-3mV/单格/°C
	循环(均充) Cycle(Equalization)	13.6~13.8V
温度对容量影响 Effect of temp. to Capacity	40°C (104°F)	106%
	25°C (77°F)	100%
	0°C (32°F)	86%
自放电 Self Discharge		≤3%/月 @ 25°C



外形 Layout

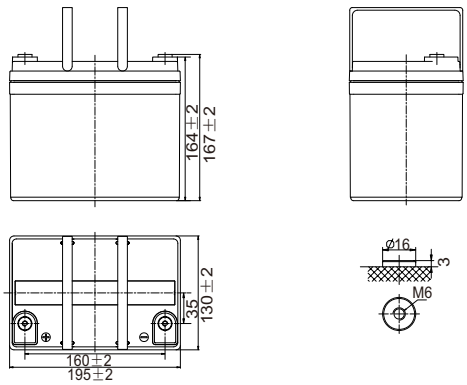

恒流放电表(A) 25 °C Constant Current Discharge

F.V/Time	5min	10min	15min	20min	30min	45min	1h	1.5h	2h	3h	4h	5h	6h	8h	10h	20h
1.85V/cell	82.8	57.2	45.2	37.0	27.8	20.6	17.4	13.0	10.4	7.81	6.18	5.15	4.43	3.51	2.88	1.56
1.80V/cell	96.6	67.4	52.6	42.6	31.4	23.0	19.3	14.3	11.4	8.45	6.66	5.55	4.75	3.76	3.07	1.65
1.75V/cell	105.4	72.3	55.6	44.7	32.9	24.0	20.0	14.7	11.7	8.68	6.83	5.68	4.85	3.83	3.12	1.67
1.70V/cell	114.1	77.1	58.8	47.0	34.3	24.9	20.8	15.2	12.1	8.93	7.00	5.81	4.96	3.90	3.17	1.69
1.67V/cell	119.2	79.9	60.7	48.3	35.2	25.4	21.2	15.5	12.3	9.07	7.10	5.88	5.01	3.94	3.19	1.70
1.60V/cell	131.3	86.5	65.0	51.5	37.2	26.8	22.2	16.2	12.8	9.40	7.34	6.06	5.16	4.03	3.26	1.74

恒功率放电表(W) 25 °C Constant Power Discharge

F.V/Time	5min	10min	15min	20min	30min	45min	1h	1.5h	2h	3h	4h	5h	6h	8h	10h	20h
1.85V/cell	157.8	109.5	86.9	71.2	53.7	40.0	33.9	25.4	20.4	15.3	12.2	10.1	8.74	6.94	5.69	3.11
1.80V/cell	181.6	127.7	100.1	81.3	60.2	44.4	37.3	27.7	22.1	16.5	13.1	10.9	9.35	7.42	6.06	3.28
1.75V/cell	195.6	135.4	104.8	84.5	62.4	45.8	38.4	28.4	22.6	16.9	13.3	11.1	9.51	7.54	6.15	3.32
1.70V/cell	209.1	142.7	109.6	88.0	64.6	47.2	39.5	29.2	23.2	17.3	13.6	11.3	9.70	7.66	6.23	3.36
1.67V/cell	216.4	146.9	113.1	89.9	65.9	48.0	40.1	29.6	23.5	17.5	13.8	11.4	9.79	7.73	6.28	3.38
1.60V/cell	235.8	157.2	118.5	94.4	68.8	49.9	41.7	30.7	24.3	18.0	14.2	11.7	10.0	7.88	6.40	3.44

常规系列
(General purpose)
DJW12-33(12V33Ah)

理士电池 ®
LEOCH BATTERY

应用 Applications

- 通讯
  Telecommunications
- UPS、数据中心
  UPS、Data Center
- 储能、电力
  Energy Storage 、Electric Systems
- 紧急照明、安防
  Emergency Lighting、Security
- 医疗、电子设备
  Medical、Electronic Equipment
- 动力
  Motive Power

特征 General Features

- 25℃下，设计浮充寿命可达5年。
  Under 25℃, the designed floating life is up to 5 years.
- 特殊的排气结构和密封技术，使用安全可靠，安装灵活，维护便捷。
  Special exhaust structure and sealing technology, safe and reliable, flexible installation, convenient maintenance.

标准 Standards

- 符合IEC 61056，GB/T19639
  Compliance with IEC 61056,GB/T19639
- UL 认证
  UL Certified
- 企业通过了TS16949,OHSAS 18001, ISO 9001和ISO 14001体系认证
  Manufactured in Leoch®TS16949, OHSAS 18001,ISO 9001 and ISO 14001 certified production facilities

放电特性曲线 Discharge Characteristics

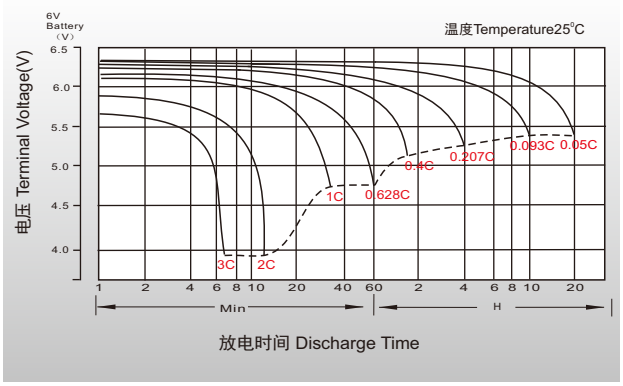

浮充特性曲线 Float Charging Characteristics

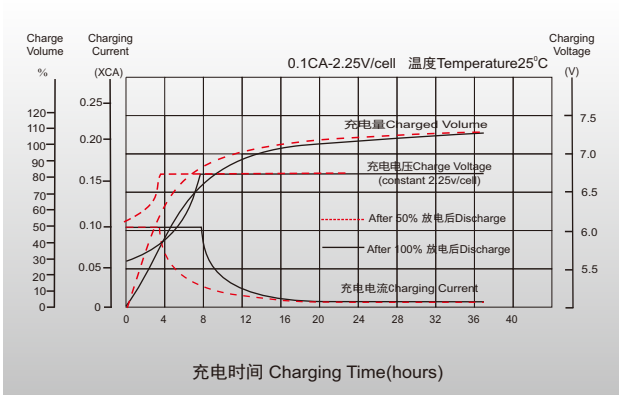

温度对容量影响 Temperature Effects in Relation to Battery Capacity

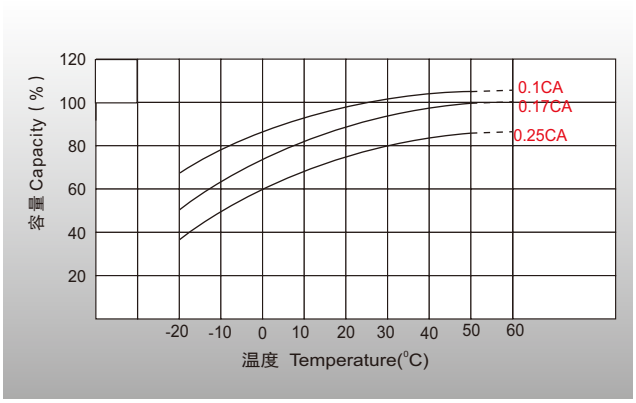

温度对浮充寿命影响Temperature Effects on Long Term Float Life

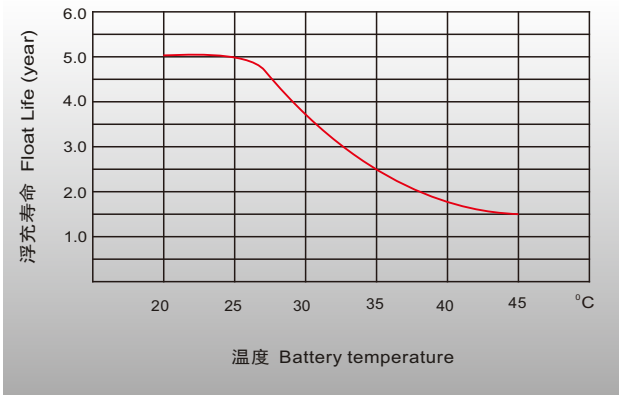

深圳市理士新能源发展有限公司

地 址 Address：深圳市南山区南海大道新保辉大厦5楼
5th Floor, Xinbaohui Bldg., Nanhai Blvd., Nanshan, Shenzhen, China.

电 话 Tel：0755-86036060/26067200/26452211

传 真 Fax：0755-26951222/26067217/26452217

邮政编码 Postal code：518052

邮箱 E-mail：battery@leoch.com

© 2018 LEOCH。版权所有。
商标和标识为LEOCH及其附属公司所有，除非另有说明。
如有修订，恕不另行通知。

文件编号：LB-DJW12-33-PD-CN-V1.0-201808